EICHHOLTZ

Assembly instruction

Item description
Wall Lamp Mantra

Attention! Turn off the electricity supply at the main circuit panel before installing. Do not connect the electricity supply until your luminaire is fully assembled and installed.

Care instructions: Wipe with a soft dry cloth, do not use chemicals or abrasive cleaning materials.

Eichholtz B.V.
Delfweg 52
2211 VN Noordwijkerhout
The Netherlands

www.eichholtz.com
service@eichholtz.com
+31 (0)252 515 850

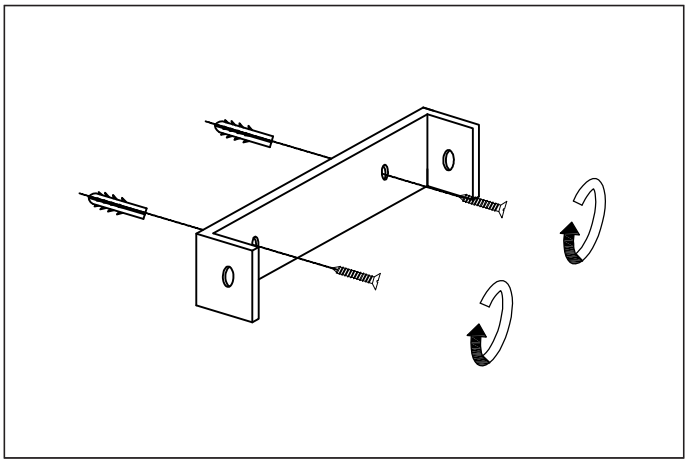

1. Fix the crossbar to the wall by using wall mounting plugs and screws suitable to your wall type.

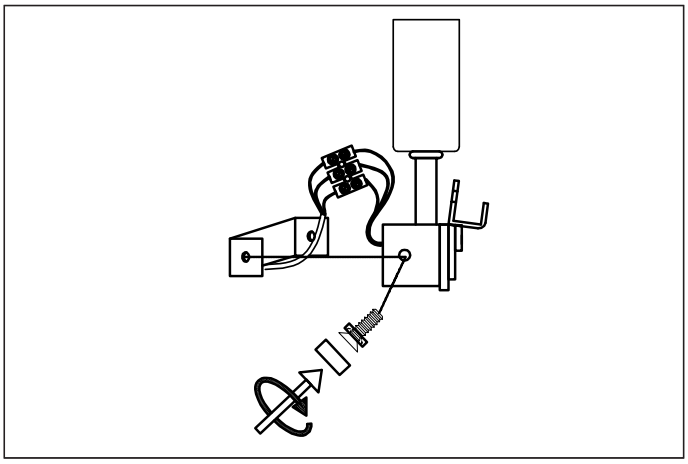

2. Connect the 3 wires according to their colours. Brown is the live wire, blue is the neutral wire, green/yellow is the earth wire.
Place the lamp over the crossbar and fix it with the screws on the side.

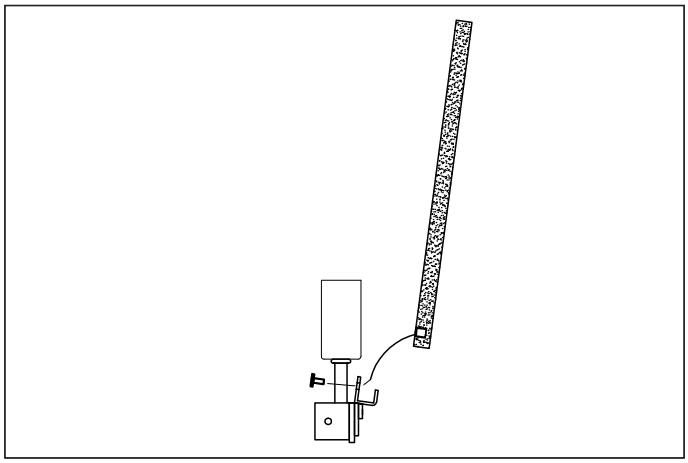

3. Place the alabaster plate in the holder and fix it with the screw.

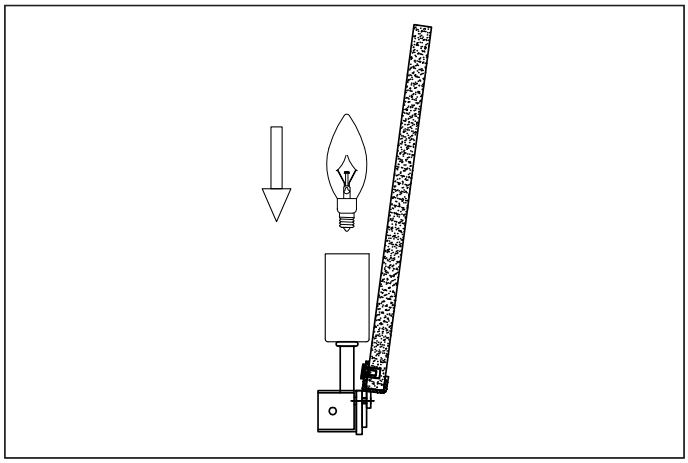

2. Place the bulb (E14).